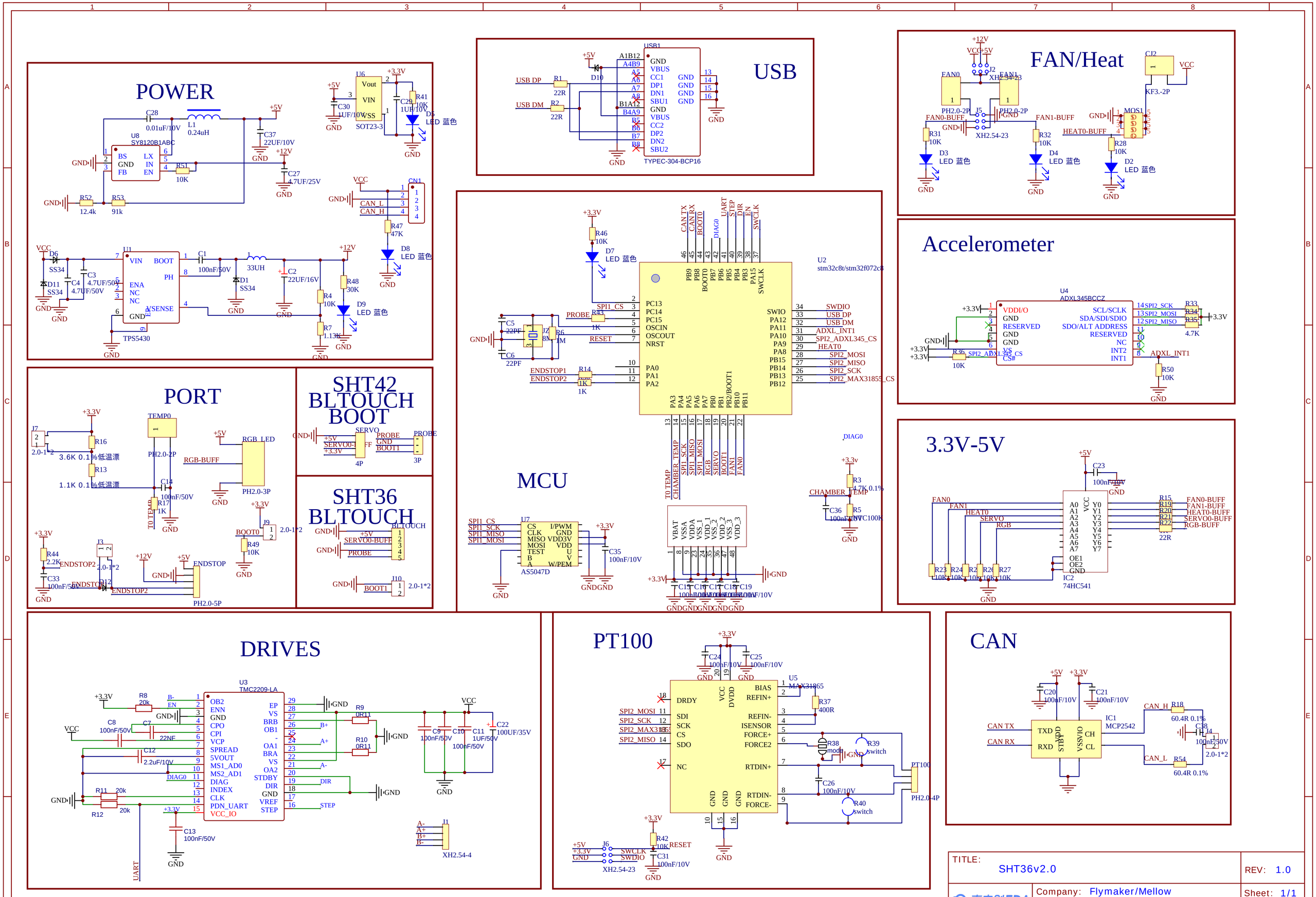
POWER
U8
SY8120B1ABC
U1
TPS5430
U6
SOT23-3
CN1
USB
USB1
TYPEC-304-BCP16
FAN/Heat
Accelerometer
U4
ADXL345BCCZ
3.3V-5V
IC2
74HC541
MCU
U2
stm32c8t/stm32f072c8
U7
AS5047D
PORT
SHT42
BLTOUCH
BOOT
SHT36
BLTOUCH
DRIVES
U3
TMC2209-LA
PT100
U5
MAX31865
CAN
IC1
MCP2542
TITLE:
SHT36v2.0
REV: 1.0
Company: Flymaker/Mellow
Sheet: 1/1
Date: 2022-09-12
Drawn By: Jay S